Optimization of a Fast CT System for More Accurate Radiotherapy

Erica Cherry, Meng Wu, and Rebecca Fahrig

Problem: motion during treatment

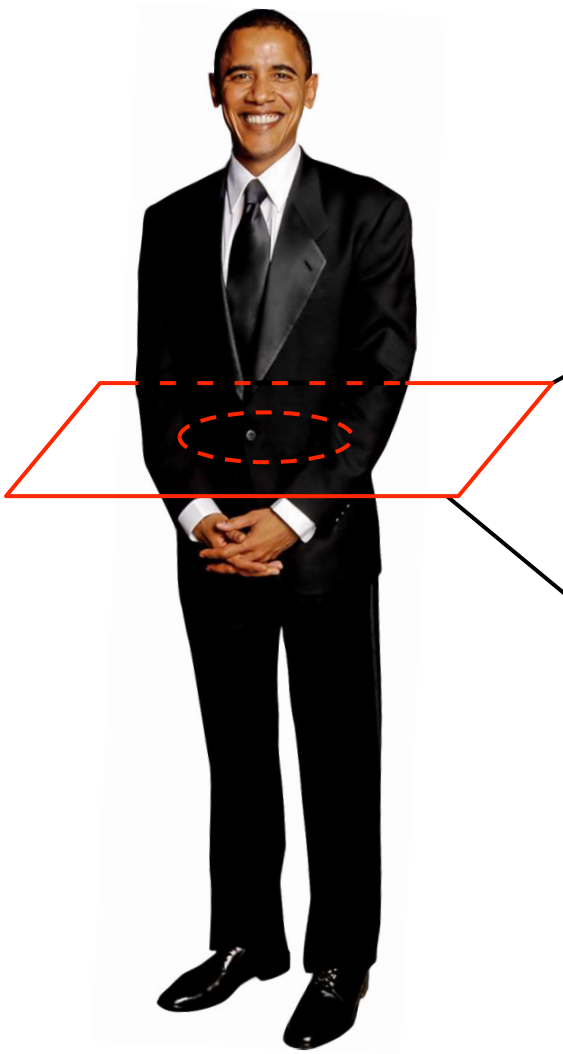

Two overlapping thorax views during normal breathing

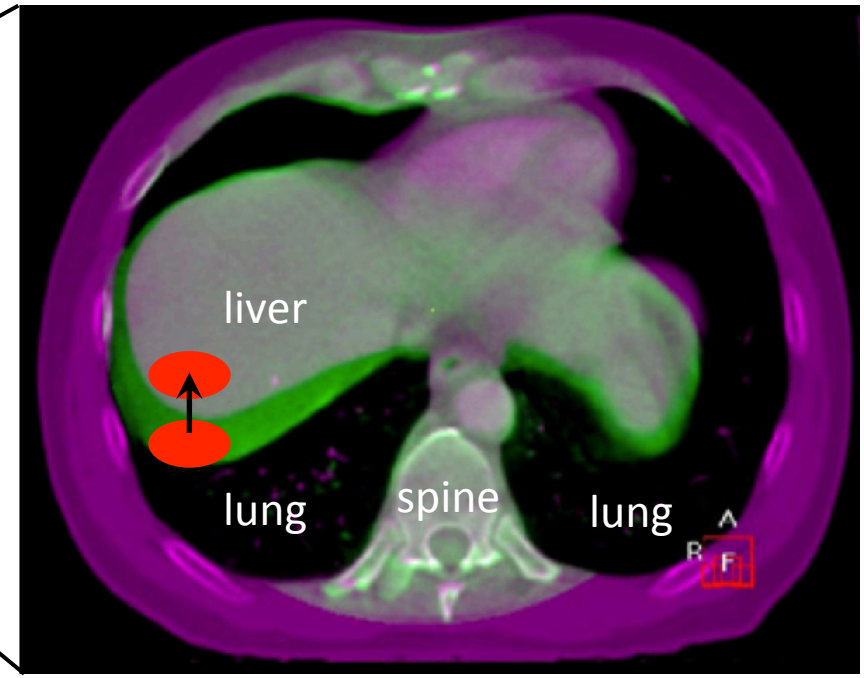

K.K. Brock, "Imaging and Image-Guided Radiation Therapy in Liver Cancer," 2011

Fix: PHASER

- PHASER = Pluridirectional High-Energy Agile Scanning Electron Radiotherapy
- Basic idea: deliver entire radiation treatment in a few seconds to effectively freeze motion
- Mechanism: use high-energy electrons, which can be steered electronically (no moving parts)
- 100 MeV electrons can deliver a dose with similar accuracy to 2 MeV photons (mean energy)

PHASER Setup

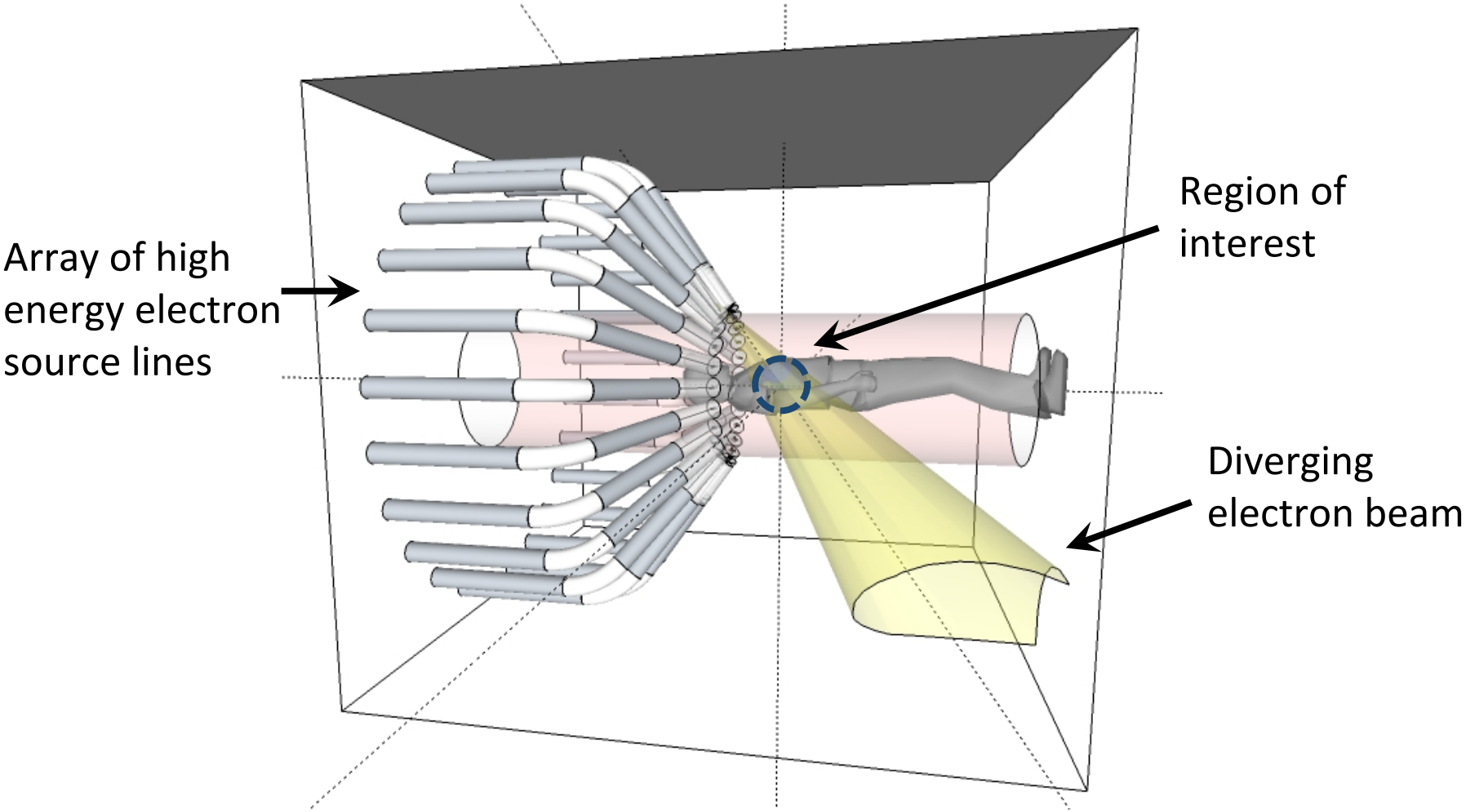

Not shown: patient table, beam stop, imaging system, outer casing

Work Flow

Acquire pre-treatment raw data

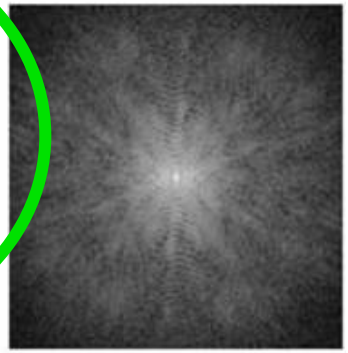

Reconstruct image

Register image

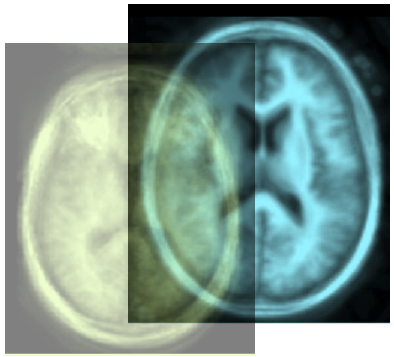

Adjust therapy plan

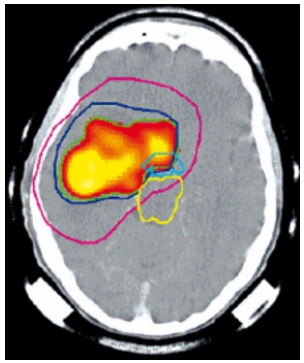

Deliver therapy

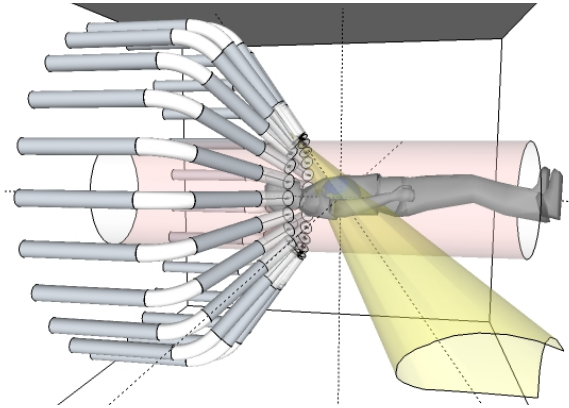

Verify correct tissue was irradiated

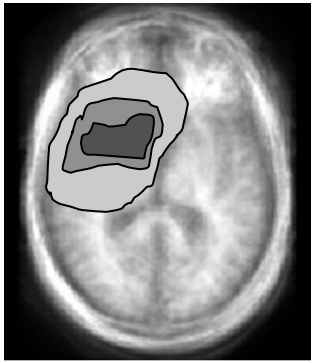

Goals of Pre-Treatment Imaging System

- Acquire a high-quality image to adjust treatment plan
  - Image within a breath hold
  - Adequate contrast to identify important structures
  - 40-cm axial FOV, 50-cm diameter patient
- Acquire a fast-image of the the tumor to verify position immediately prior to treatment
  - Speed is more important than quality
  - 10-cm axial FOV, 50-cm diameter patient
- Don't break the bank: 64-slice scanner ~ $1 million, 128-slice scanner ~ $2 million*

** The internet, don't quote this*

Geometry 1: Helical Scan

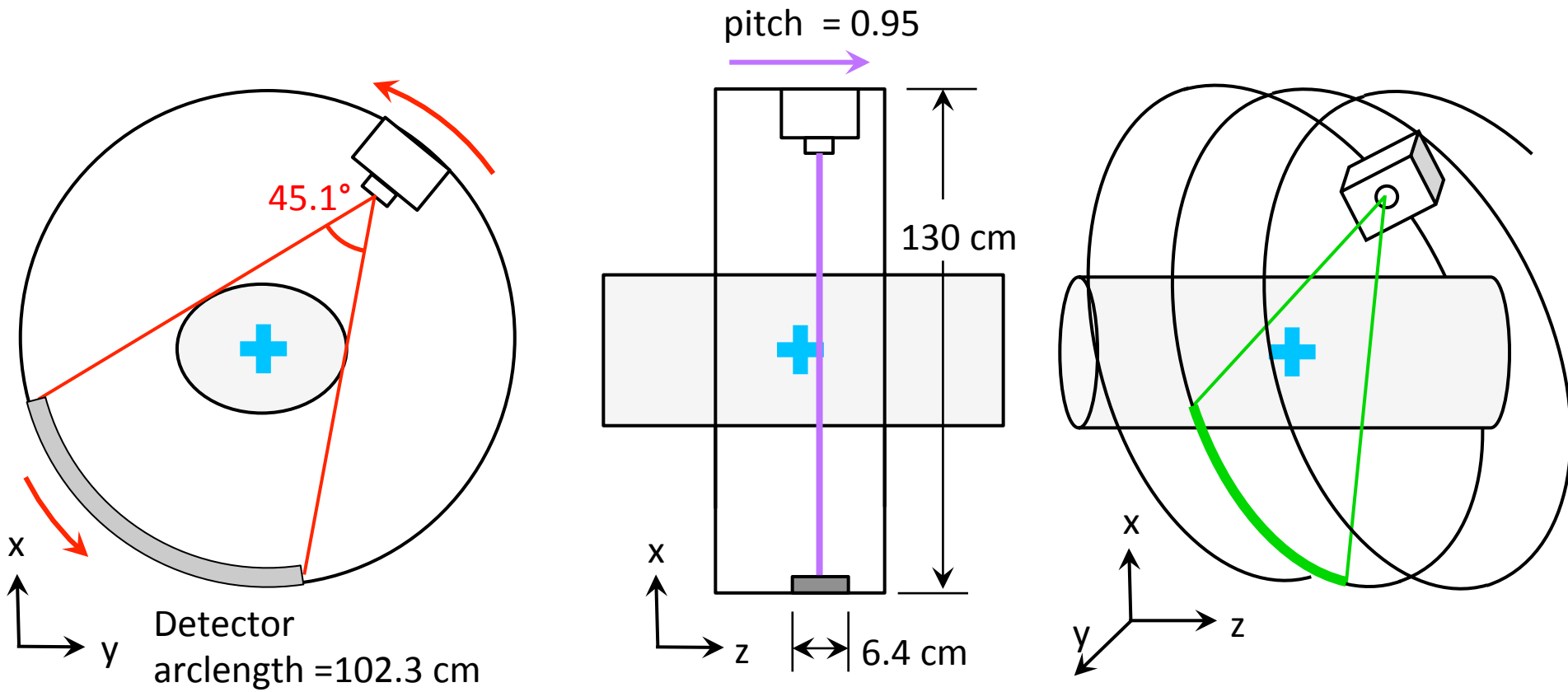

Axial field of view = 40 cm

In-plane field of view = 50 cm (diameter)

Geometry 2: Cone Beam Scan

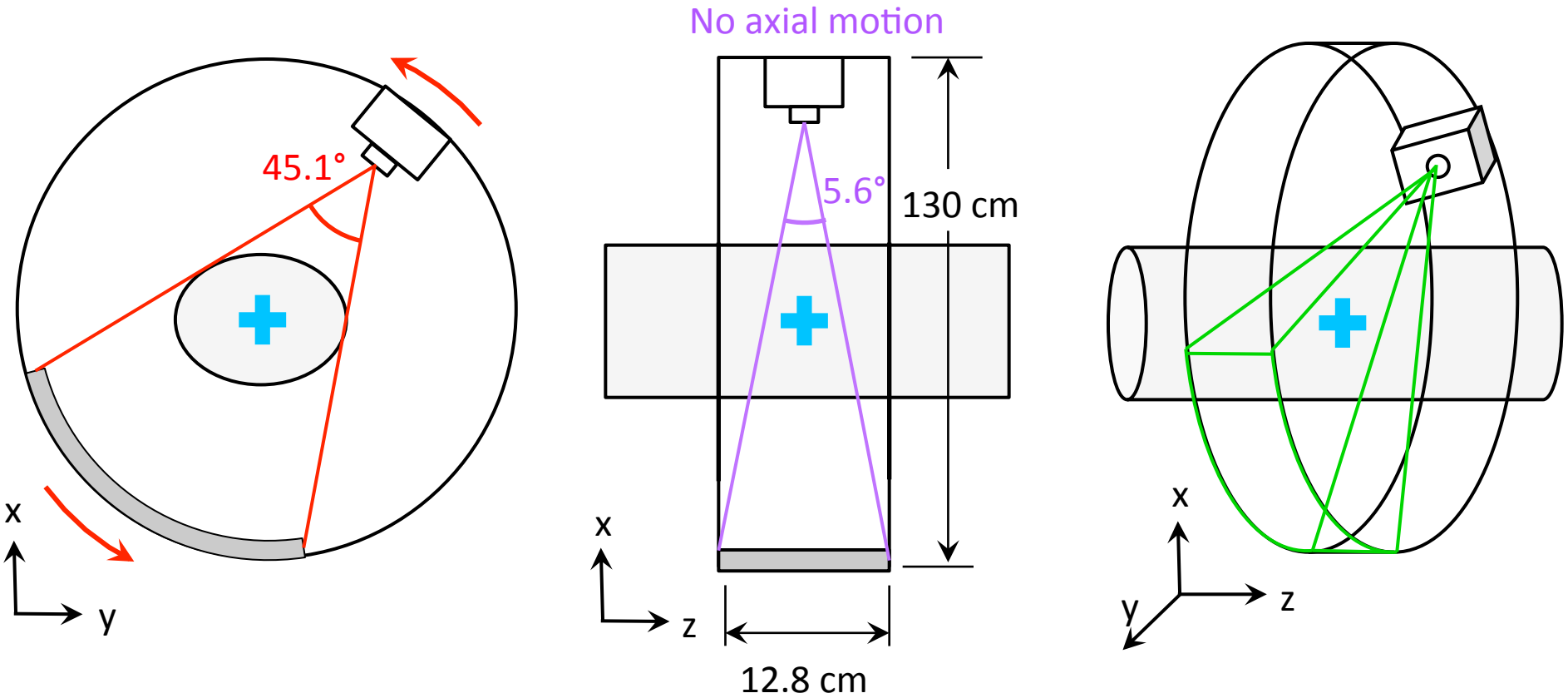

Axial field of view = 10 cm

In-plane field of view = 50 cm (diameter)

Parameter Summary

Parameter	Clinical Scanner	PHASER Scanner
Source to detector distance	1040 mm (too small to laterally shift patients)	1300 mm
Detector rows/ pixel size	64 rows, 1 x 1 mm^2 (FOV too small)	16 low res (4 x 4 mm^2) + 32 higher res (2 x 2 mm^2) + 16 low res (4 x 4 mm^2)
Pixels/row	672-888 ($$$)	512
Voxel size	0.5 – 1.0 mm^3 at detector (unnecessary resolution, $$$)	2.0 mm^3 at detector
Antiscatter grid	Varies	2D, 35 mm lamellae

CT Simulation with XCAT Phantom

- Full dataset is the sum of two simulations
  - Primary photons (deterministic)
  - Scattered photons (Monte Carlo)
- Numerical phantom used to simulate patient

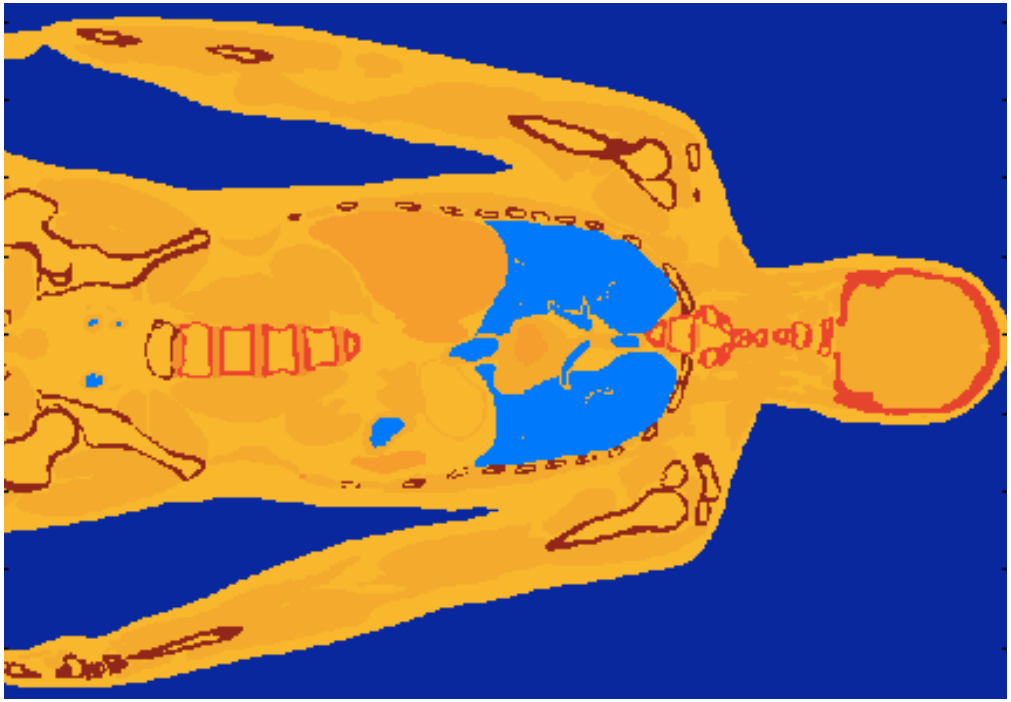

Primary Simulation

Software generates cone beam projection images, includes tools for 3D volume reconstruction, DOES NOT include scatter

X-ray attenuation, one energy, one material

$$I(L) = I_0 \exp(-\mu L)$$

X-ray attenuation, polyenergetic, several materials

$$I(x_{tot}) = \int_{E\min}^{E\max} I_{0,E} \prod_{i=1}^{n} \exp(-\mu_{iE} L_i) dE$$

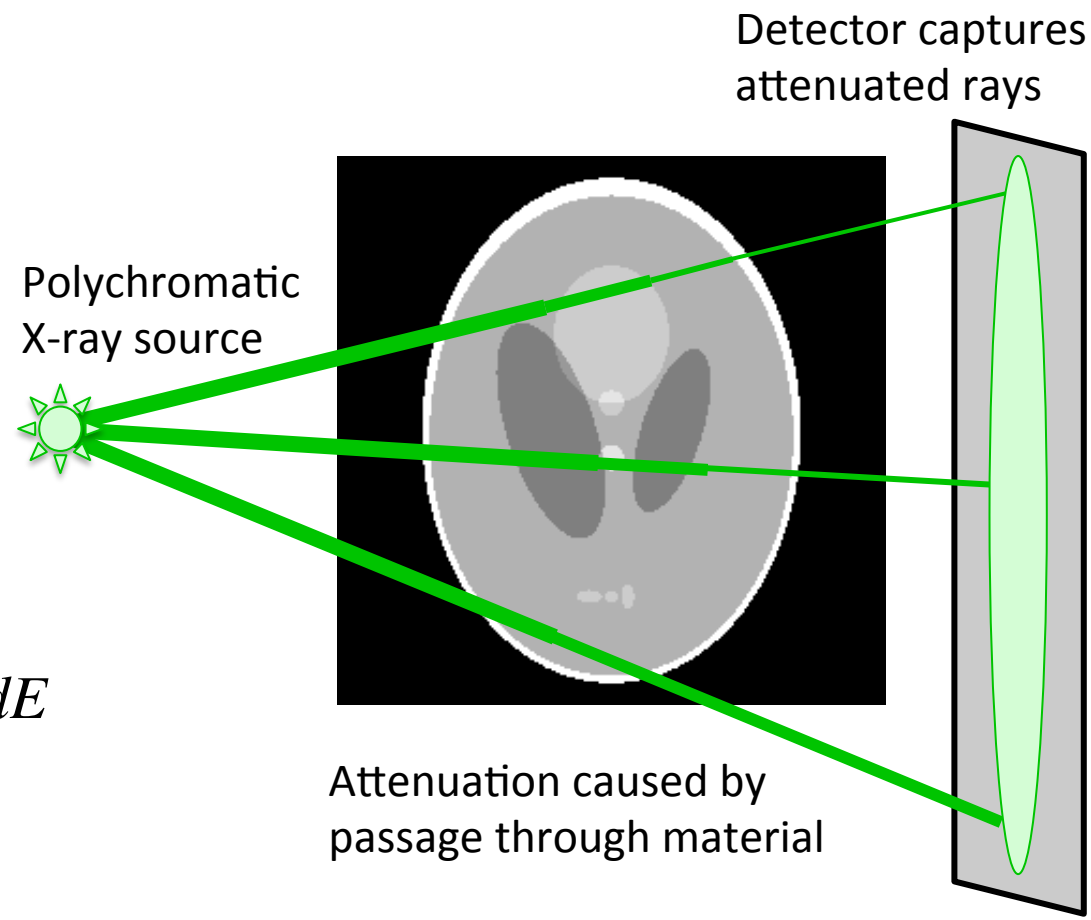

Scatter Simulation: Why Bother?

Ideal CT: X-rays either go straight to detector or are absorbed

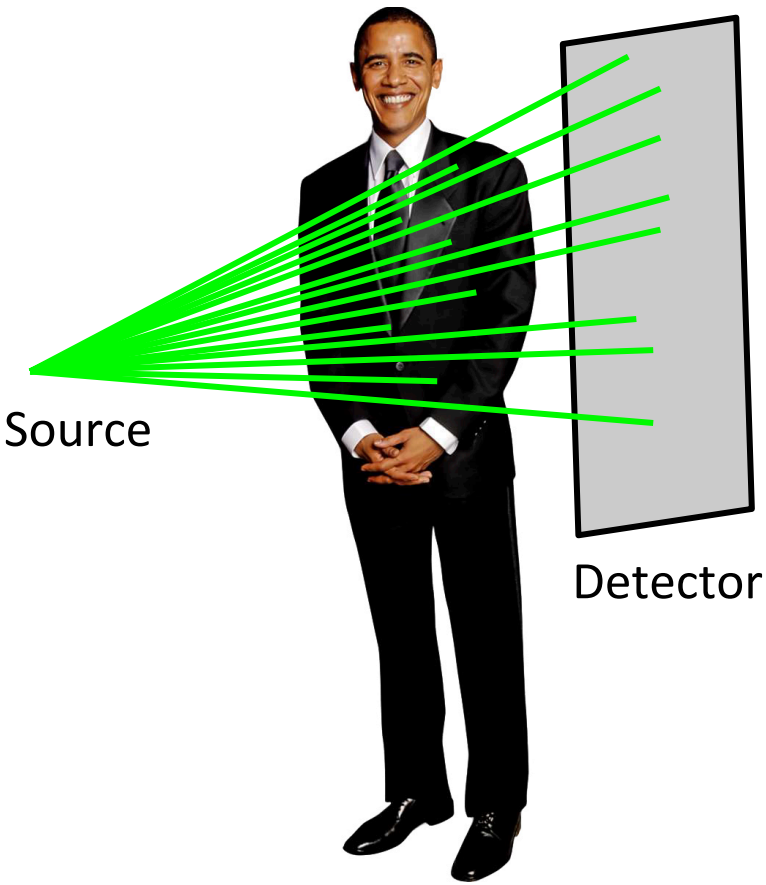

Real CT: Some x-rays are deflected to the wrong detector location

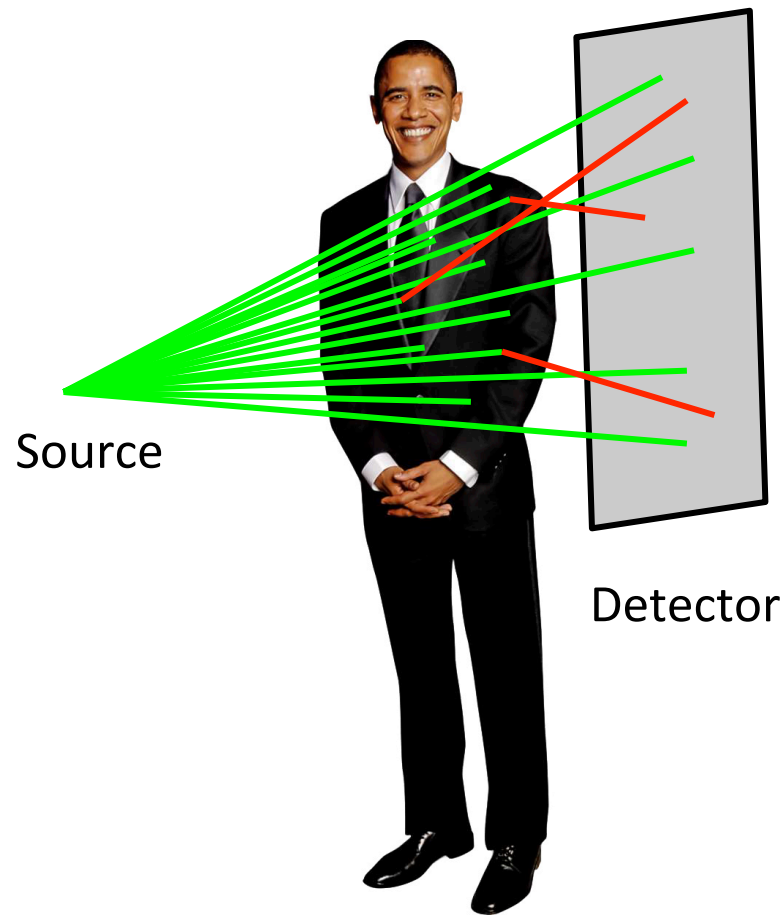

More About Scatter

- Most accurately modeled with a Monte Carlo simulation (accounts for random physical processes responsible for scattering)
- Can be reduced with an anti-scatter grid (see right)

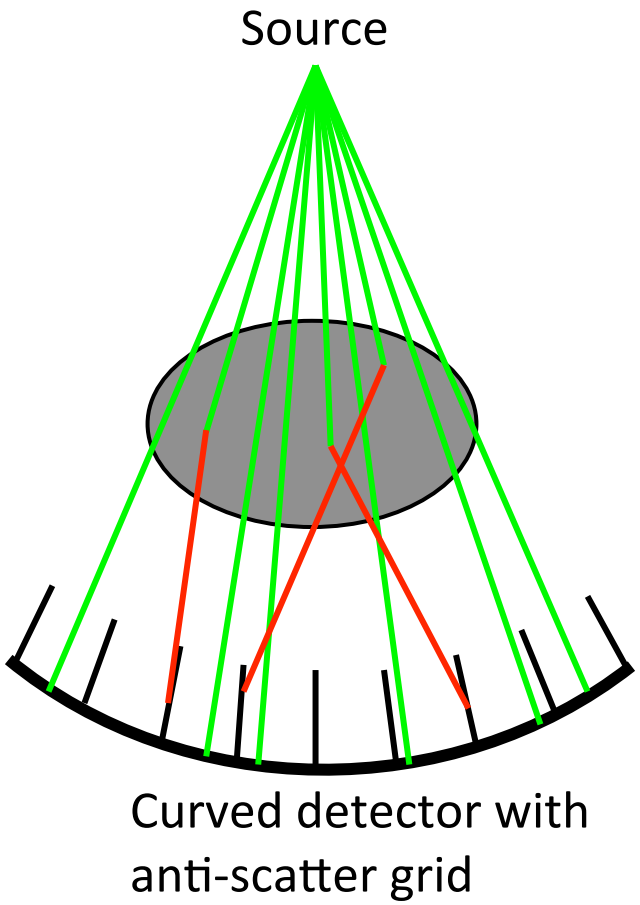

Results

Phantom

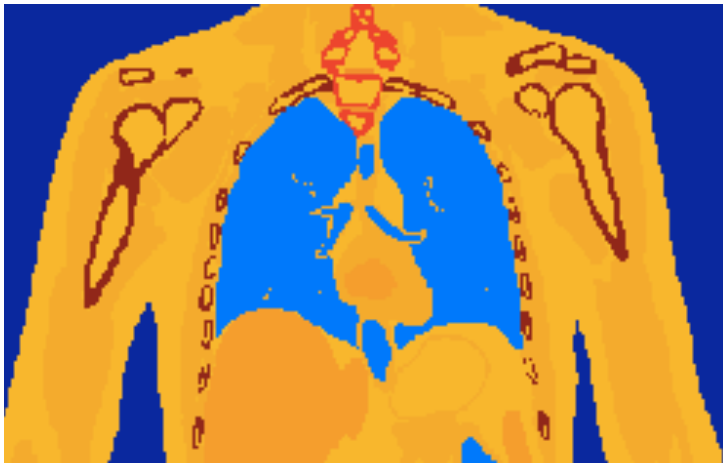

Primary only

Primary and scatter

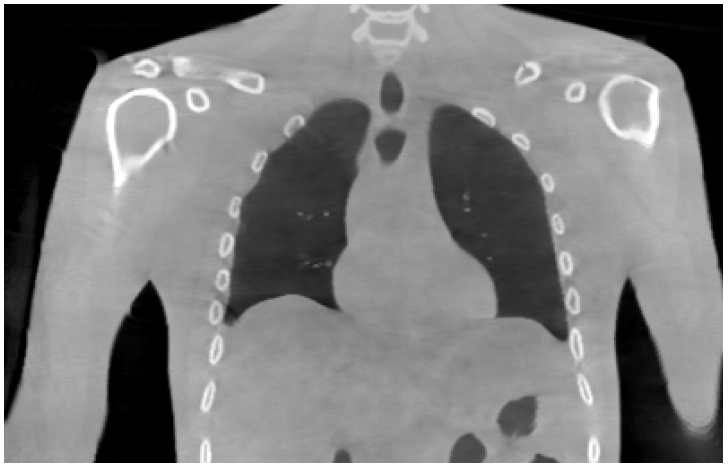

Scatter corrected

Results: Shoulders

Primary only

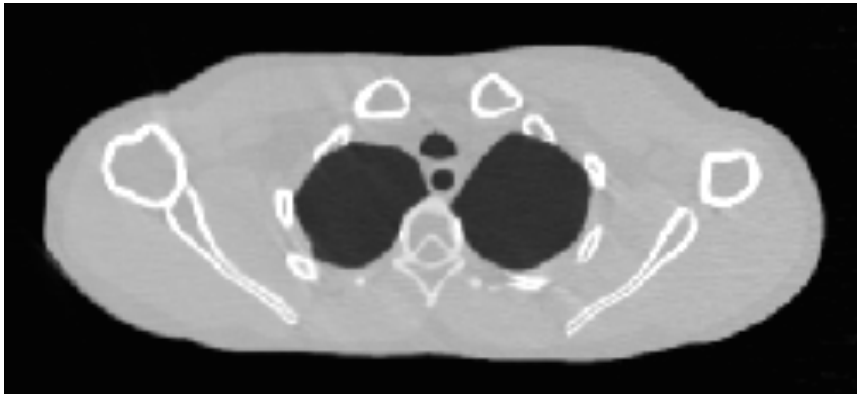

Primary and scatter

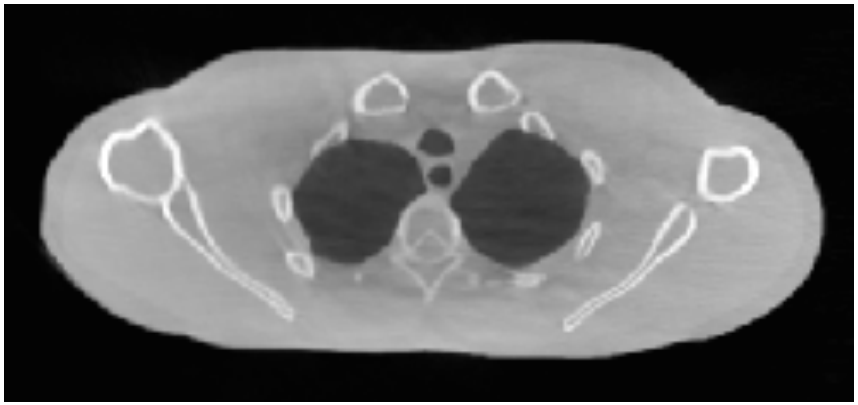

Scatter corrected

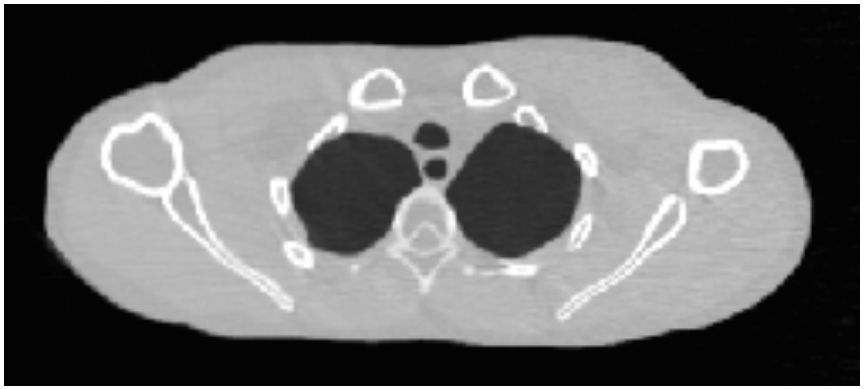

Current system

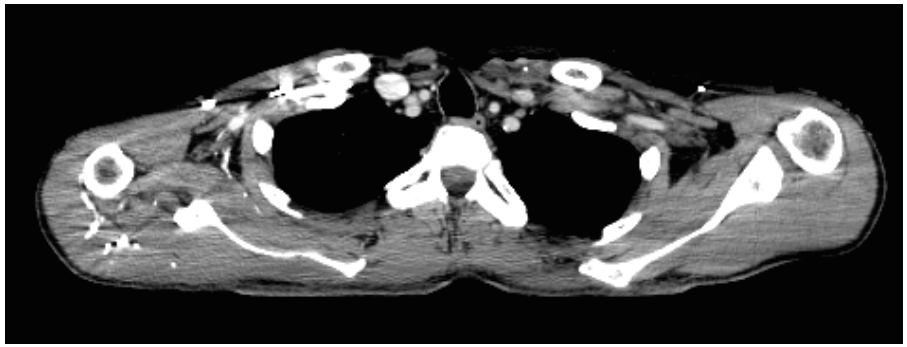

Results: Lungs, middle

Primary only

Primary and scatter

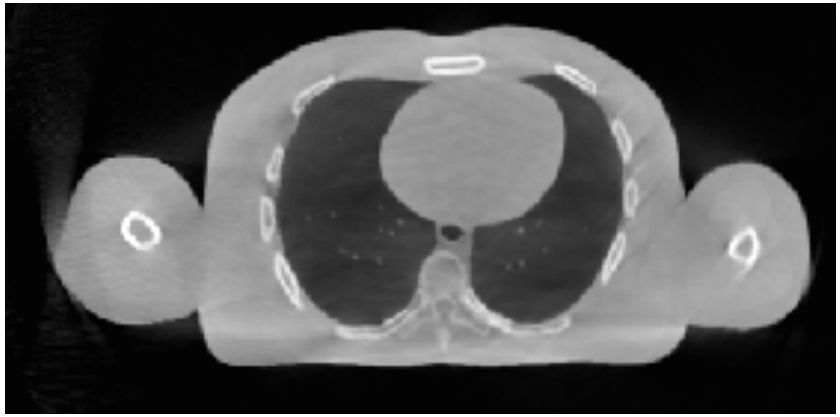

Scatter corrected

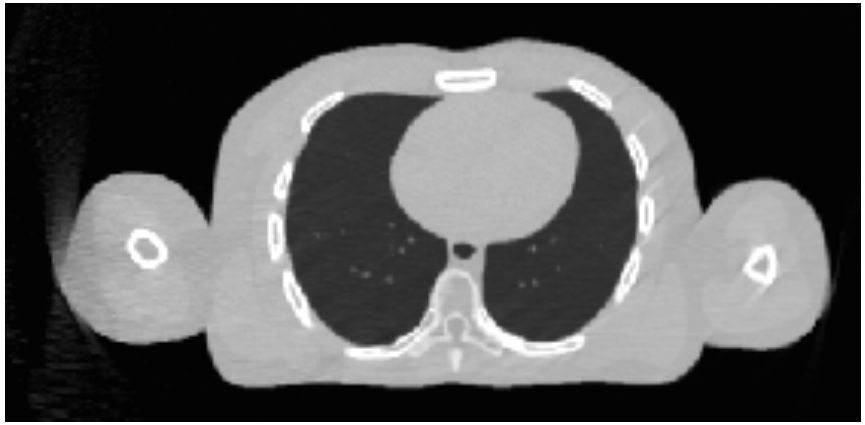

Current system

Results: Lungs, bottom

Primary only

Primary and scatter

Scatter corrected

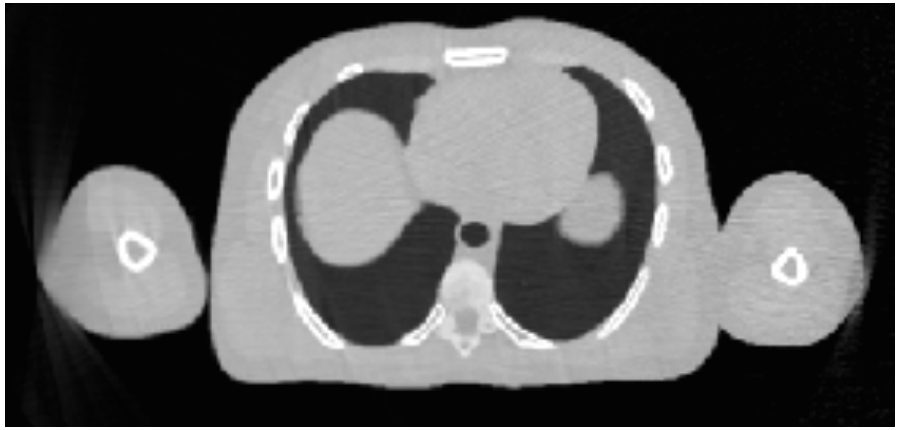

Current system

Conclusions

- Current system design produces reasonable image quality fast and at a reasonable price
- Some remaining work on cone beam and truncation artifact reduction
- Extremely general CT simulation can evaluate image quality in other new systems

Future Work

- Simulate imaging phantoms with low-contrast tumors and use system to evaluate ease of lesion recognition
- Apply system to real patient data
- Next step of imaging pipeline: use registration software to compare registration accuracy with XCAT phantoms and real patient data

Acknowledgements

- Meng Wu and Rebecca Fahrig
- PHASER team
- Stanford Cancer Imaging Training Fellowship
- Department of Defense

Questions?